Reg. I | | | | | | | | | | |

[17ME44]

FOURTH SEMESTER B.Tech EXAMINATION, JUNE – 2019

DESIGN OF MACHINE ELEMENTS - I

Time: 3 Hours **Maximum Marks:70**

Instructions:

1. Answer any **FIVE** full questions, choosing at least TWO questions from each part.
2. Missing data may be suitably assumed.
3. Use of machine design data hand book is permitted.

PART – A

1. a. What are the important mechanical properties of metals? Explain each of them briefly. **07**

   b. A beam of uniform rectangular cross section is fixed at one end and carries a load 1000N at a distance of 300mm from the fixed end. The maximum bending stress in the beam is 80MPa. Find the width and depth of beam. If depth is twice that of width. **07**

2. a. State the following theories of failure **06**

   i. Maximum principal stress theory.

   ii. Maximum shear stress theory.

   iii. Distortion energy theory.

   b. Find the diameter of a rod subjected to a bending moment of 3×10^6 Nmm and a twisting moment of 1.8×10^6Nmm according to the following theories of failure, by taking yield stress as 420MPa and FOS as 3. **08**

   i. Maximum principal stress theory

   ii. Shear stress theory

3. a. Determine the maximum stress in rectangular plate of (50x 80) mm with a hole of 10mm diameter at the centre is loaded in axial tension of 10kN .Thickness of the plate is 10mm. **06**

   b. An unknown weight falls through 20mm on to a collar rigidly attached to the lower end of a vertical bar 2m long and 500mm^2 in cross section. If the maximum instantaneous extension is known to be 2mm, determine the corresponding stress and the value of the unknown weight. Take E=200GPa. **08**

4. a. Derive the Soderberg's relation. **06**

   b. A cantilever beam made of cold drawn carbon steel having σ_U= 550MPa, σ_Y= 470MPa, σ_{-1}=275MPa of circular cross section is subjected to a load which varies from –F to 3F as shown in Fig.4b. Determine the maximum load that this member can with stand for an infinite life using a FOS =2. **08**

JAIN (Deemed-to-be University) Learning Resource Centre Jain Global Campus Ramanagar-112

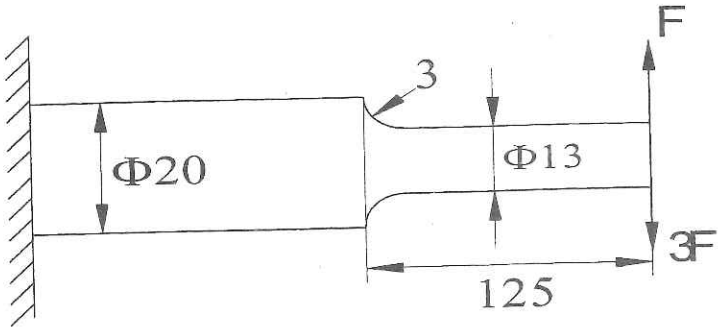

Fig. 4b (All dimensions are in mm)

PART-B

5. A shaft is supported by two bearings placed 1m apart. A 500mm diameter pulley is mounted at a distance of 200mm to the right of left hand bearings and this drives a pulley directly below it with the help of belt having maximum tension of 3000N. The pulley weighs 1000N. Another pulley 300mm diameter is placed 300mm to the left of right hand bearings is driven with the help of electric motor and the belt which is placed horizontally to the right when viewed from the left bearing. This pulley weighs 500N.The angle of contact for both pulley is 180^0 and μ=0.24. Determine suitable diameter for a solid shaft assuming torque on one pulley is equal to torque on the other pulley .The allowable shear stress on the material is 53MPa, design the shaft by assuming minor shock condition. **14**

6. a. Design a socket and spigot cotter joint to sustain an axial load of 100kN. The material selected has the following design stresses σ_t= 100MPa, σ_c= 150MPa, and τ= 60MPa. **07**

   b. Design a protected type cast iron flange coupling for a steel shaft transmitting 30kW at 200rpm.The allowable shear stress in the shaft and key material is 40MPa. The maximum torque transmitted to be 20% greater than full load torque. The allowable shear stress in the bolt is 60MPa and in the flange is 40MPa. **07**

7. a. A triple riveted lap joint is to be made between 15mm plates. If the safe working stress in tensile, crushing and shear are 120,160 & 90 MPa respectively, design the riveted joint. The pitch in the outer most row is twice the pitch of the inner rows. **07**

   b. A plate of 80mm wide & 10mm thick is to be welded to another plate by means of parallel fillet welds as shown in fig 7b. The plates are subjected to a load of 50kN. Find the length of weld, so that the maximum stress does not exceed 50MPa. Considering the joint under static loading only. **07**

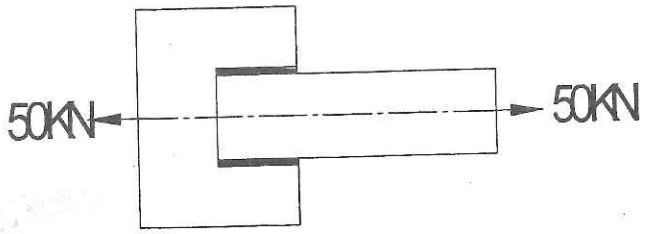

Fig. 7b

8. a. Explain self-locking and over hauling in power screws. **06**

b. A weight of 500kN is raised at a speed of 6m/min by two screw rods with square thread of (50x8) cut on them. The screw rods are driven by scars **08**

Determine

i. The torque required to raise the load.

ii. Speed of rotation of screw rod.

iii. Maximum stress induced in the rod.

iv. The efficiency of screw drive.